Description method of balancing of impellers and rotors

Revision:

0	06/03/2025	Advan.Mech. Des.Man. /F.Cademartori	QA/HSEM C.Delli Quadri/M.Tremolada	R&D & Prod. Eng.Manager/ M.Borghetti	First emission
Rev.	*Date*	Issued	Verified	Approved	*Reason*

COPY COMPLIANT to the original document resident on the computer system at the time of printing

Index

1 Scope and field of application 3

2 Acronyms 3

3 Introduction. 4

3.1 Balancing theory: rigid and flexible rotors. 4

3.1.1 Rotor classification. 6

3.1.2 API 610 12th edition standards: introduction. 6

3.1.3 ISO21940-12 Mechanical vibration – Rotor Balancing: introduction. 7

3.1.4 Balancing: general terminology. 10

3.2 Main balancing techniques. 11

4 Balancing principia according to API610 12th Edition. 12

4.1 Impellers, drums, and shafts (API610 §6.9.3.1). 12

4.2 Between bearings pumps (BB1, BB2, BB3 and BB5). 13

4.3 API610 Annex J: Determination of Residual Unbalance. 15

5 Balancing principia according to ISO 21940. 17

5.1 ISO 21940.11: rigid rotors. 17

5.1.1 Two (correction) plane balancing. 18

5.2 ISO 21940.12: flexible rotor. 20

5.2.1 Low speed balancing procedures: single-plane balancing (A). 22

5.2.2 Low speed balancing procedures: two-plane balancing (B). 22

5.2.3 Individual component balancing prior to assembly (C). 22

5.2.4 Balancing subsequent to controlling initial unbalance (D). 23

5.2.5 Balancing in stages during assembly (E). 23

6 References 25

7 Attachment A: Guidance for balance quality grades for rotors with rigid behaviour 26

COPY COMPLIANT to the original document resident on the computer system at the time of printing

1 Scope and field of application

The scope of this procedure is to describe the method to be followed for balancing of impellers, assembled rotors and methods to evaluate the admissible limits of residual unbalance.

This document integrates and explains the procedure described in G.05.03.02.

2 Acronyms

$b = width\ [mm]$

$D = shaft\ diameter\ (largest)\ at\ impeller\ [mm]$

$e_{per}\ permissible\ residual\ specific\ unbalance\ \left[{}^{g\ mm}/_{kg}\right]$

$F_t = flexibility\ factor\ [-]$

$L = bearing\ span\ [mm]$

$N = maximum\ operating\ speed\ [rpm]$

$U_{per} = permissible\ residual\ unbalance\ [g\ mm]$

$W = rotor\ mass\ [kg]$

COPY COMPLIANT to the original document resident on the computer system at the time of printing

3 Introduction.

3.1 Balancing theory: rigid and flexible rotors.

Unbalance can be characterized as a mass M_i with a distance from rotating axis e_i. Normally, a rotor can be represented as in Figure 1: unbalance is axially distributed, and each ith vector has a magnitude, equal to a $U_i = M_i \times e_i$, and a phase.

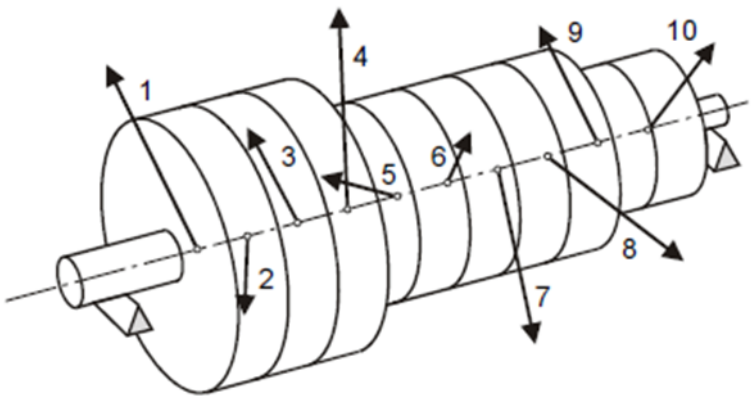

Figure 1 Unbalance.

If the rotor is *rigid*, regardless of the axial distribution of the vectors in Figure 1, it can be balanced by arbitrarily choosing two correction planes; if the rotor is *flexible*, however, depending on the operating speed, the imbalance vectors may or may not excite a different modal shape (the one with the smallest separation margin between the operating speed and the corresponding natural frequency), and balancing is effective at one speed (and may no longer be effective at another).

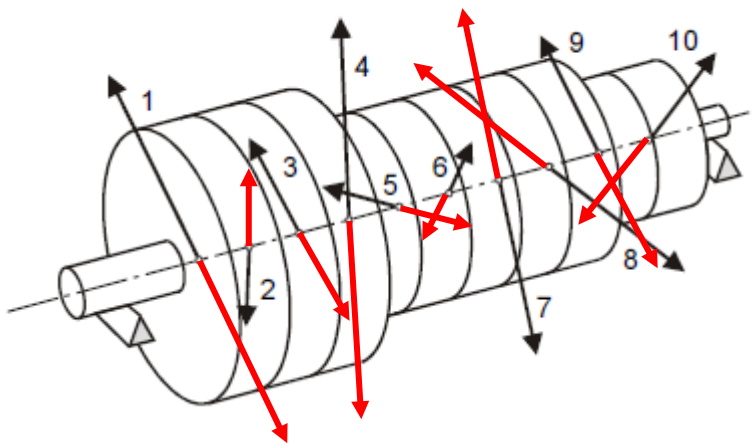

COPY COMPLIANT to the original document resident on the computer system at the time of printing

Figure 2 Hypothetical balancing (with known axial distribution).

For these reasons, low-speed balancing procedures are used for rigid rotors, while high-speed balancing procedures are used for flexible rotors; in some cases, even for flexible rotors it is possible to perform low-speed balancing, resulting in a limited level of vibrations at the operating speed.

Balancing a flexible rotor on a low-speed machine is therefore an approximate process: the final quality of the balancing depends on both the initial imbalance and its axial distribution.

If it could be possible to know the initial axial distribution of the unbalance, the correction planes (i.e. the planes where corrective mass are added or removed) should be placed as close as possible to these known positions, as shown in Figure 2, where the correction vectors are represented in red; theoretically, the residual imbalance after balancing could be reduced to zero regardless of the rotational speed.

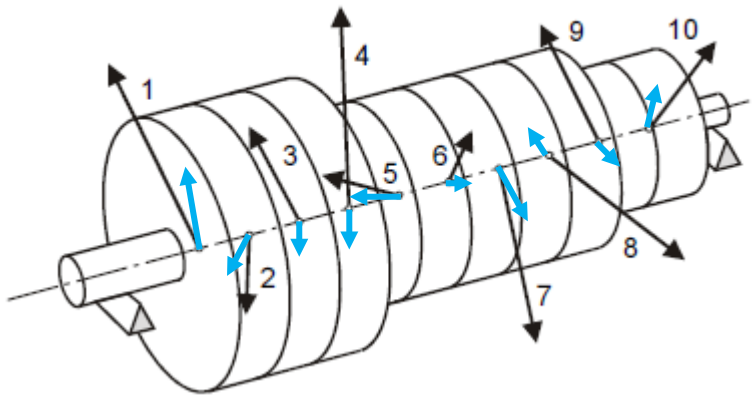

Figure 3 Hypothetical balancing (with known axial distribution).

Usually, such axial distribution is not known, so there are no universally valid procedures for every rotor. However, pre-balancing each component can limit the magnitude of each individual imbalance vector (Figure 3, blue arrows instead of black arrows) and reduce the vibration level at the operating speed.

COPY COMPLIANT to the original document resident on the computer system at the time of printing

3.1.1 Rotor classification.

International standards define a classification of rotors based on their dynamic behavior at operating speed; this subdivision requires the determination of critical speeds either experimentally or theoretically.

Usually, rotors are defined as **rigid** or **flexible**:

- a rotor is *rigid* when, at operating speed, the potential deformation energy of the bearings is greater than 80% of the total deformation energy of the system;
- a rotor is *flexible* when, at operating speed, the potential deformation energy of the shaft is greater than 20% of the total deformation energy of the system.

This subdivision is based on the dynamic behavior of the shaft/bearing system, and the distribution of deformation energy is the discriminant between the two behaviors.

Table 1 shows the main properties of the two types of rotors compared.

Table 1 Rigid vs. flexible rotor.

Rigid rotor	Flexible rotor
It can be balanced on two arbitrarily chosen *correction planes*.	The balancing effectiveness is function of number and position of *correction planes*.
It maintains its balancing changing the rotational speed.	Balancing performed at a given rotational speed can cause high vibrations at another speed.

Therefore, two-plane (low) constant speed balancing is appropriate for rigid rotors, but it is inadequate for flexible rotors.

3.1.2 API 610 12th edition standards: introduction.

The API610 12th edition standards introduce the concept of a *classically stiff rotor* (API610 §3.1.8), that is a rotor whose *first "dry" critical speed* has a margin over the pump's maximum continuous operating speed:

- greater than 20% for rotors designed to operate exclusively in wet conditions;
- greater than 30% for rotors designed to operate in both dry and wet conditions.

A *critical speed* (API610 §3.1.9) is the shaft rotational speed at which the rotor-bearing-support system is in a state of resonance.

Other definitions that involve the concept of “critical speed” are:

COPY COMPLIANT to the original document resident on the computer system at the time of printing

- *dry critical speed* (API610 §3.1.14), that is the rotor critical speed assuming:
  - no liquid effects;
  - rotor supported only at its bearing;
  - bearings with infinite stiffness;
- *wet critical speed* (API610 §3.1.67), that is the rotor critical speed calculated considering the additional support and damping produced by the action of the pumped liquid within internal running clearances at the operating conditions and allowing for stiffness and damping within the bearings.

These concepts are adopted for one and two stage pumps, in design phase of the rotor: the rotor shall be designed so its *first dry-bending critical speed* is at least 20% above the maximum continuous operating speed (API610 §6.9.1.2). For between bearings pumps, rigid rotor does not require a detailed lateral analysis (API610 §9.2.4.1.1, Table 18, and Table I.1).

Unlike other standards, API 610 makes a distinction between dry and wet behavior, but does not specify that the critical speed must be of the bending/flexural type (i.e., involving shaft deformation); they are focused exclusively on separation from possible resonance phenomena with synchronous excitation (e.g., unbalance).

3.1.3 ISO21940-12 Mechanical vibration – Rotor Balancing: introduction.

ISO21940-12 standards are more aligned with the general definition previously explained: a rotor is considered rigid for balancing purposes if its highest service speed is at least 30% below the first flexural critical speed (ISO21940-12 §E.1). The same standards include an experimental procedure (ISO21940-12 Annex E) to determine whether the rotor is rigid or flexible.

The ISO standards introduce five rotor classes based on the procedure required for their balancing:

- class 1, rigid rotors;
- class 2 semi-flexible rotors;
- class 3 flexible rotors;
- class 4 special flexible rotors;
- class 5 single-speed flexible rotors.

COPY COMPLIANT to the original document resident on the computer system at the time of printing

Table 2 ISO classification of rotors.

Class	Description	Example
1	**Rigid rotor**: unbalance can be corrected in any two (arbitrary selected) planes, and after this correction, unbalance does not significantly change at any speed up to maximum speed service.	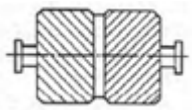 Gear wheel
2	**Quasi flexible rotor: r**otor that cannot be considered rigid but can be balanced in a low-speed balancing machine.	
2A(1)	A rotor with a single transverse plane if unbalance (e.g., single mass on a light shaft whose unbalance can be neglected).	Shaft with grinding wheel
2B(1)	A rotor with two axial planes of unbalance (e.g., two masses in a light shaft whose unbalance can be neglected).	Shaft with grinding wheel and pulley
2C(1)	A rotor with more than two transverse planes of unbalance.	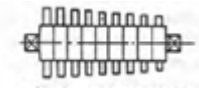 Jet-engine compressor rotor
2D(1)	A rotor with uniformly distributed unbalance.	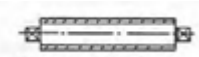 Printing press roller
2E(1)	A rotor consisting of a rigid mass of significant axial length supported by a flexible shaft whose unbalance can be neglected	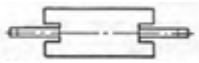 Computer memory drum
2F(2)	A symmetric rotor with two end correction planes, whose maximum speed does not significantly approach second critical speed, whose service speed range does not contain first critical speed and with a controlled initial unbalance	Five stage centrifugal pump

COPY COMPLIANT to the original document resident on the computer system at the time of printing

2G(2)	A symmetric rotor with two end correction planes and a central correction plane whose maximum speed does not significantly approach second critical speed and with a controlled initial unbalance	Multistage pump impeller
2H(2)	An asymmetric rotor with controlled initial unbalance treated in a similar manner as class 2F rotors	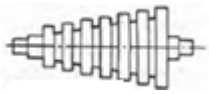 Impeller pump, steam turbine
3	**Flexible rotors**: rotors that cannot be balanced in low-speed balancing machines and require high-speed balancing.	Generator rotor
4	**Special flexible rotors**: rotors that could fall into class 1,2, or 3 but have in addition one or more components that are themselves flexible or are flexible attached	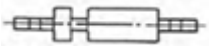 Rotor with centrifugal switch
5	**Single speed flexible rotors**: rotors that could fall into class 3 but for some reason (e.g., economy) are balanced for a single service speed.	High-speed motor
(1)	rotors where the axial distribution of unbalance is known	
(2)	rotors where the axial distribution of unbalance is not known	

As specified in Table 2, a rotor is defined as *semi-flexible* or *semi-rigid* if it cannot be considered rigid, but it can be balanced on a low-speed balancing machine.

Single-plane or two-plane balancing with a constant speed balancing machine is therefore adequate for *class 1* (rigid) and *class 2* (semi-flexible) rotors, while for *class 3, 4, and 5* (flexible) rotors, other techniques are necessary (e.g., least square error influence coefficient, combined modal, etc.).

COPY COMPLIANT to the original document resident on the computer system at the time of printing

3.1.4 Balancing: general terminology.

Rotors that are out of unbalance tolerance need correction. These unbalance corrections often cannot be performed in the planes where the unbalance tolerances were set but need to be performed where material can be added, removed or relocated.

The number of necessary correction planes depends on the magnitude and distribution of the initial unbalance, as well as on the design of the rotor, e.g. the shape of the correction planes and their location relative to the tolerance planes.

It is important to define some terminology that will be used in this document:

- *bearing planes*, where bearings sustain the shaft;
- *correction planes*, where corrective masses are added/removed;
- *tolerance planes*, where corrective masses modulus is referred/calculated;
- *static unbalance*, is the unbalance that can be corrected only one correction plane;
- *dynamic unbalance*, is the unbalance that can be corrected only with two or more correction planes.

Today's balancing machines usually have tolerance planes coincided with bearing planes.

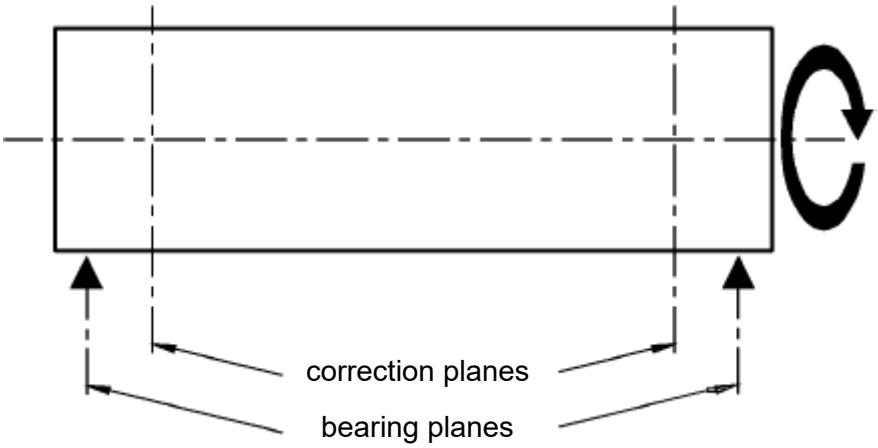

Figure 4 Bearing and correction planes.

COPY COMPLIANT to the original document resident on the computer system at the time of printing

3.2 Main balancing techniques.

The most important balancing techniques are:

a. using balancing machine
   - hard bearing balancing machine;
   - soft bearing balancing machine;

b. in situ
   - single-plane balancing (Influence Coefficient method);
   - two-plane balancing (Influence Coefficient method);
   - single-plane balancing (static and dynamic components);
   - single-plane balancing (Influence Coefficient method using linear regression);
   - Generalized Influence Coefficient method using pseudo-inversion;
   - multiplane balancing (linear programming techniques);
   - modal balancing;
   - three-trial-weight method;
   - multiplane balancing without phase;
   - rotor balancing without trial weights.

The techniques of type b) represent a selection of the main methodologies adopted for field balancing and require special equipment for vibration detection.

COPY COMPLIANT to the original document resident on the computer system at the time of printing

4 Balancing principia according to API610 12th Edition.

4.1 Impellers, drums, and shafts (API610 §6.9.3.1).

Impellers, balance drums, and all major rotating components must be dynamically balanced (i.e., with two correction planes) to ISO21940-11, G2.5 grade. The mass of the arbor used for balancing shall not exceed the mass of the component being balanced. Shafts are not required to be balanced. For single-stage BB1 and BB2 rotors with interference-fit components, the vendor may choose to balance the assembled rotor (§9.2.4.2) instead of balancing major rotating components individually.

Component balancing may be single-plane if the ratio *D/b* (see Figure 5) is 6 or greater.

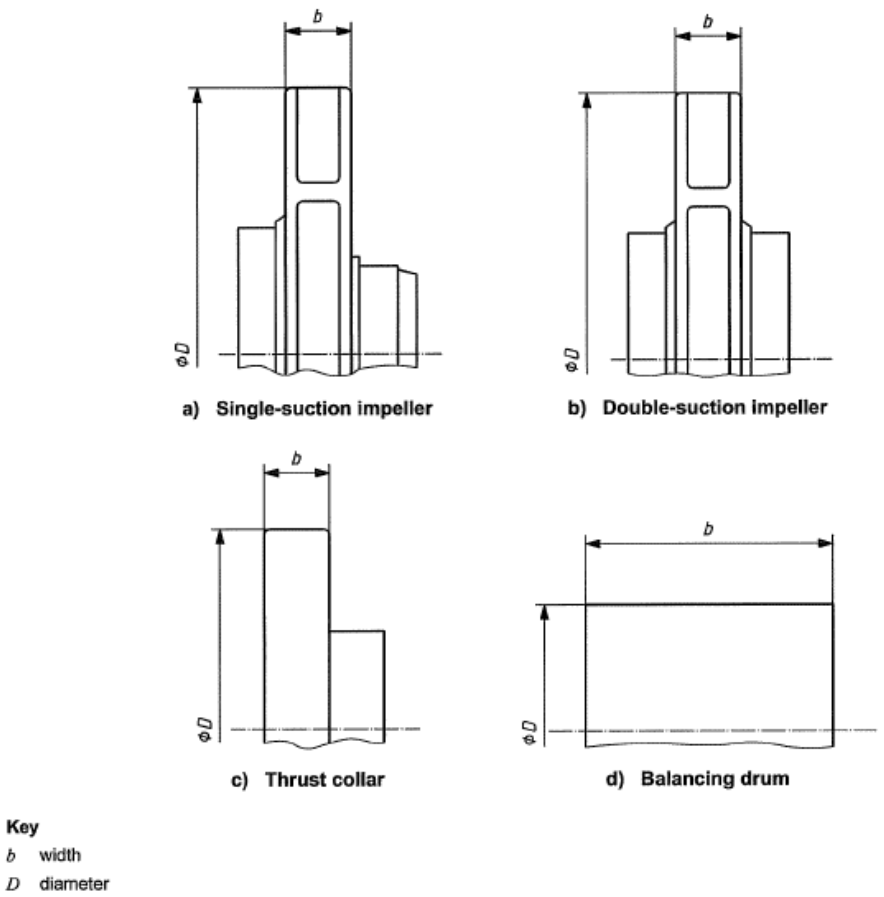

Figure 5 Single plane balancing criteria.

If required, the components must be balanced to grade ISO21940-11, G1. However, balancing to ISO Grade G1 is generally not repeatable when the components are dismantled and remounted on their arbors, because of the minute mass eccentricity values associated with these fine levels of unbalance requirements

COPY COMPLIANT to the original document resident on the computer system at the time of printing

4.2 Between bearings pumps (BB1, BB2, BB3 and BB5).

For between bearing pumps API610 defines an important parameter called flexibility factor F_t:

$$F_t = \frac{L^4}{D^2}$$

$$L = bearing\ span\ [mm]$$

$$D = shaft\ diameter\ (largest)\ at\ impeller\ [mm]$$

This parameter is strictly related to shaft static deflection/stiffness, so it is indirectly connected to critical speed; it is also a good indicator of both the runout attainable during manufacture and the quality of balance that can be achieved and maintained (Table 3).

Table 3 Shaft and Rotor Runout Requirements.

Flexibility factor $F_t\ [mm^2]$	**Allowable Shaft Runout** $TIR\ [\mu m]$	**Component Fit on Shaft**	**Allowable rotor Radial Runout** TIR Runout of impeller hubs, balancing drum, and sleeves. $[\mu m]$
>1.9E9	40	clearance	90
		interference	60
≤1.9E9	25	clearance	75
		interference	50

Table 3 should be used in combination with Table 4 where balancing grade and procedures are defined in function of maximum continuous speed.

For rotors assembled with clearance:

- there is a maximum limit for the operating speed (3800 rpm);
- balancing of individual components is required;
- the complete rotor balancing is not required because the clearances do not guarantee adequate precision.

For rotors assembled with interference:

COPY COMPLIANT to the original document resident on the computer system at the time of printing

- beyond 3800 rpm, there is a limit for the flexibility factor;
- balancing of both individual components before assembly and the complete rotor according to procedures "C+B or D" are required;
- beyond 3800 rpm, assembled rotor shall be balanced to G0.67 (instead of grade G2.5).

For rotors with interference and a maximum operating speed below 3800 rpm, the standards prescribe a balancing grade of G2.5 for two main reasons:

- at 3800 r/min, the upper limit of balance Grade G2.5 produces a force due to unbalance of 10 % of rotor weight, which means that unbalance does not have any material effect on the rotor's operating shape;
- if rotor flexibility is high, it is not practical to achieve and maintain the straightness necessary for balance Grade G0.67.

Table 4 Rotor Balance Requirements.

Component Fit on shaft	Maximum continuous speed [rpm]	Flexibility factor $F_t\,[mm^2]$	Rotor Balance Procedures[1]	Rotor Balance Grade
clearance	≤3800	no limit	C	[2]
interference	≤3800	no limit	C + B or D	G2.5
	>3800	≤1.9E9	C + B or D	G0.67[3]

The rotor balancing must be done without the half-coupling and the rotating part of the seal. The keyway slots must be filled with a rounded half-key.

After balancing the assembly, a residual unbalance verification test must be performed following the procedure in Annex J.

[1] See ISO21940.12
[2] Balance correction during assembly is not feasible because clearance fit does not maintain corrected balance.
[3] If rotors of higher flexibility are used at speeds above 3800 r/min, achieving and maintaining this balance level requires special attention to design, manufacture, and maintenance

COPY COMPLIANT to the original document resident on the computer system at the time of printing

4.3 API610 Annex J: Determination of Residual Unbalance.

The maximum residual unbalance value of the rotor mounted with interference must be determined from Table 4. If the actual static load on each journal is not known, assume that the total rotor mass is equally supported by the bearings.

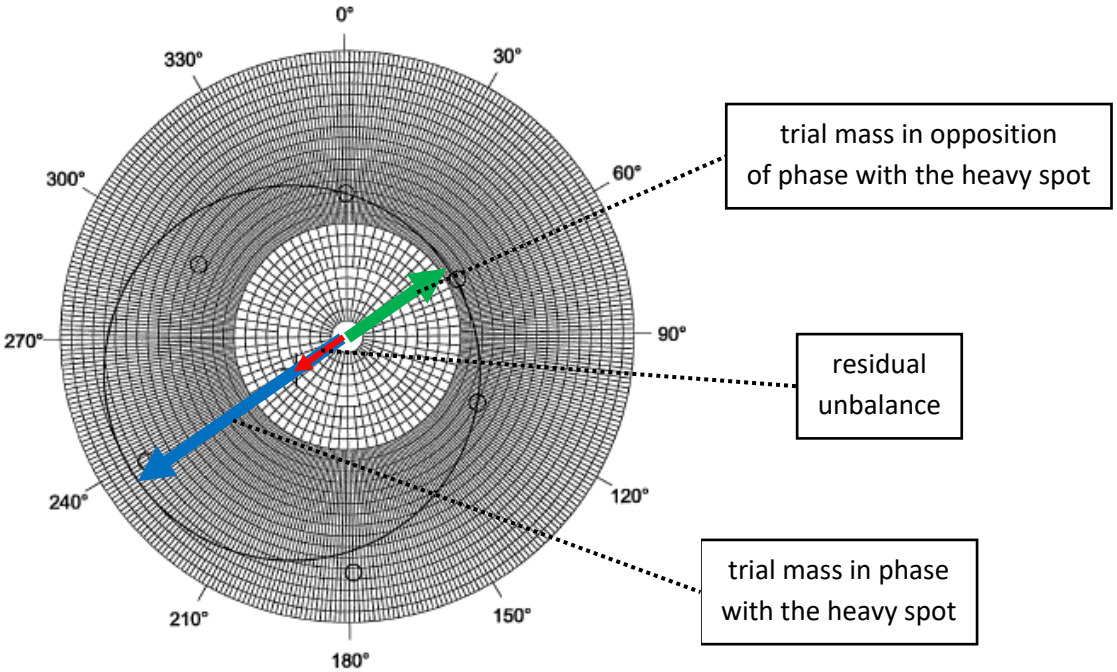

Figure 6 Residual Unbalance Worksheet-Polar Chart.

The procedure to evaluate the residual unbalance is:

1. set a test radius R (i.e., distance between test mass and rotor axis);
2. select the test mass m_{test} that provides between one and two times the maximum allowable residual unbalance U_{max} (α is a number between 1 and 2);

$$U_{max} = 9549 \times G \times \frac{W}{N}$$

$$m_{test} = \alpha \times \frac{U_{max}}{R}$$

3. if the heavy spot has been previously identified[4] on the first correction plane, define 6 or 12 equally spaced positions on the circumference with radius R starting from it;

[4] If the heavy spot cannot be determined, set an angular position and define 6 or 12 equally spaced.

COPY COMPLIANT to the original document resident on the computer system at the time of printing

4. calculate the unbalance vector (magnitude and phase) for each of the 6 or 12 test positions and plot it on the diagram in Figure 6;
5. draw the circle that best fits the plotted points;
6. the distance from the center of the circle to the origin represents the residual unbalance;
7. the average value between the maximum and minimum distances of the points on the fitting circle represents the effect of the test mass;
8. repeat the test on each correction plane.

If the specified maximum allowable residual unbalance is exceeded in any balance plane, the rotor shall be balanced more precisely and checked again. If a correction is made to any balance plane, the residual unbalance check shall be repeated in all planes.

COPY COMPLIANT to the original document resident on the computer system at the time of printing

5 Balancing principia according to ISO 21940.

The ISO 21940.11 standards address the criteria for the mechanical balancing of rigid rotor, while ISO 21940.12 standards are applicable to flexible rotors.

5.1 ISO 21940.11: rigid rotors.

The permissible residual unbalance U_{per} can be expressed as:

$$U_{per} = 9549 \times G \times \frac{W}{N} = e_{per} \times W$$

$$U_{per}\ [g\ mm]\ permissible\ residual\ unbalance$$

$$e_{per}\left[{}^{g\ mm}/_{kg}\right]\ permissible\ residual\ specific\ unbalance$$

$$W\ [kg]\ rotor\ mass$$

$$N\ [rpm]\ maximum\ operating\ speed$$

Figure 7 shows permissible residual specific unbalance e_{per} in function of the rotating speed N (white area is preferred); Table 5 compares residual unbalance limits from API610 with ISO21940-11 formulas.

Table 5 Residual unbalance.

G	ISO1940	API610
0.67	$U_{per} = 9549 \times G \times \frac{W}{N}$	$U_{per} = 6350 \times \frac{W}{N}$
1.0	$U_{per} = 9549 \times G \times \frac{W}{N}$	$U_{per} = 1.5 \times 6350 \times \frac{W}{N}$
2.5	$U_{per} = 9549 \times G \times \frac{W}{N}$	$U_{per} = 4 \times 6350 \times \frac{W}{N}$

API formula is approximately equal to the midpoint of the corresponding ISO balance quality grade, and it is very restrictive. For internal procedure that requires highest balancing quality grade, a G1.0 is suggested instead of G0.67 (Table 4).

U_{per} is the total tolerance in the plane of the centre of mass. In the case of two or more planes of balancing, this tolerance shall be allocated to all of these.

COPY COMPLIANT to the original document resident on the computer system at the time of printing

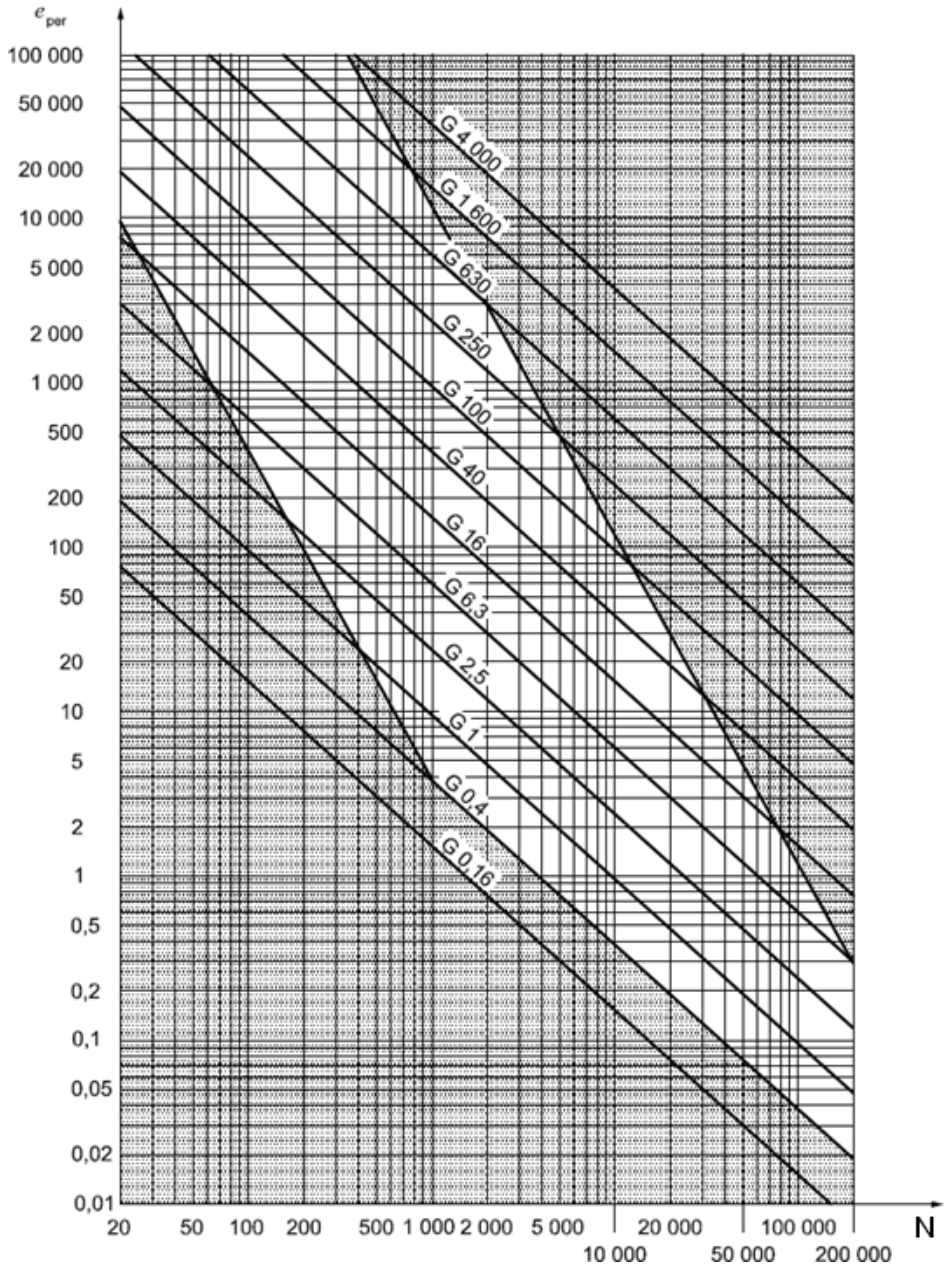

Figure 7 Permissible residual specific unbalance.

5.1.1 Two (correction) plane balancing.

In the case of single-plane correction, U_{per} is used entirely for this plane. In all other cases, U_{per} shall be allocated to the two tolerance planes in proportion to the distances from the centre of mass to the opposite tolerance plane (Figure 8). To avoid extreme tolerance conditions, both inboard and outboard rotor have limits on $U_{per\ A}$ and $U_{per\ B}$.

COPY COMPLIANT to the original document resident on the computer system at the time of printing

Inboard rotor with centre of mass in an asymmetric position	Outboard rotor with centre of mass in an overhung position
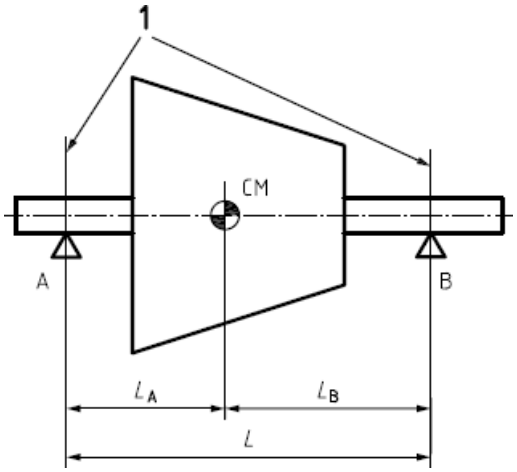	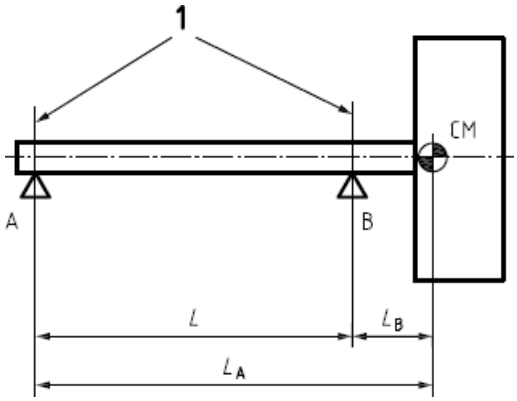
$\min(U_{per\,A}, U_{per\,B}) \geq 0.3U_{per}$ $\max(U_{per\,A}, U_{per\,B}) \leq 0.7U_{per}$	$\min(U_{per\,A}, U_{per\,B}) \geq 0.3U_{per}$ $\max(U_{per\,A}, U_{per\,B}) \leq 1.3U_{per}$

$$U_{per\,A} = U_{per}\frac{L_B}{L}$$

$$U_{per\,B} = U_{per}\frac{L_A}{L}$$

$U_{per\,A} =$ *is the permissible residual unbalance in bearing plane A*

$U_{per\,B} =$ *is the permissible residual unbalance in bearing plane B*

1 tolerance planes (= bearing planes)

A, B bearings

CM centre of mass

L bearing distance

L_A distance from the plane of the centre of mass to bearing plane A

L_B distance from the plane of the centre of mass to bearing plane B

Figure 8 Two plane balancing scheme.

COPY COMPLIANT to the original document resident on the computer system at the time of printing

5.2 ISO 21940.12: flexible rotor.

The ISO 21940 standards address the criteria for the mechanical balancing of flexible rotors. Similarly to §3.1.1, standards propose a classification (ISO 21940.12 §5) based on the recommended balancing procedures (Table 6 and Table 7).

Table 6 Rotors with flexible behaviour.

Configuration	Rotor characteristics	Recommended Balancing procedure
1.1 Discs	**Elastic shaft without unbalance, rigid disc(s)**	
	Single disc	
	perpendicular to shaft axis	A; C
	with axial runout	B; C
	Two disc	
	perpendicular to shaft axis	B; C
	with axial runout at least one removable	B+C; E
	with axial runout integral	G
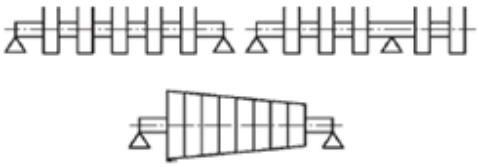	**More than two discs**	
	all discs removable, except one	B+C; D; E
	integral	G
1.2 Rigid sections	**Elastic shafts without unbalances, rigid sections**	
	Single rigid section	
	removable	B; C; E
	integral	G
	Two rigid sections	
	at least one removable	B+C; E
	integral	G

COPY COMPLIANT to the original document resident on the computer system at the time of printing

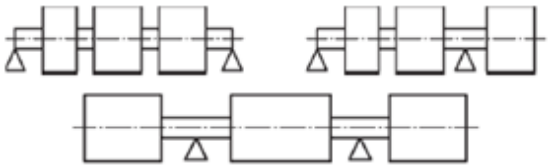	**More than two rigid sections**	
	all disc removable	B+C; E
	integral	G
1.3 Discs and rigid sections	**Elastic shaft without unbalance, rigid discs and sections**	
	One each	
	at least one removable	B+C; E
	integral	G
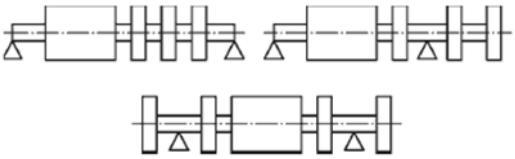	**More parts**	
	all disc removable	B+C; E
	integral	G
1.4 Rolls	**Mass, elasticity and unbalance distribution along the rotor**	
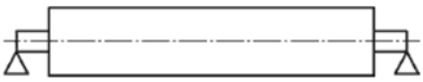	under special conditions	F
	in general	G
1.5 Rolls and discs/rigid sections	**Flexible roll, rigid discs, rigid sections**	
	discs/rigid sections removable under special conditions	C+F; E+F
	discs/rigid sections removable in general	G
	integral	G
1.5 Integral rotor	**Mass, elasticity and unbalance distribution along the rotor**	
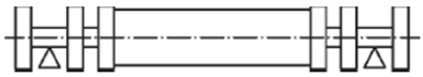	main parts with unbalances not detachable	G

COPY COMPLIANT to the original document resident on the computer system at the time of printing

Table 7 Balancing procedures.

Procedure	Description	
A	Single-plane balancing	**low speed**
B	Two-plane balancing	
C	Individual component balancing prior to assembly	
D	Balancing subsequent to controlling initial unbalance	
E	Balancing in stages during assembly	
F	Balancing in optimum planes	
G	Multiple speed balancing	**high speed**[5]
H	Service speed balancing	
I	Fixed speed balancing	

5.2.1 Low speed balancing procedures: single-plane balancing (A).

If the initial unbalance is principally contained in one transverse plane and the correction is made in this plane, then the rotor is balanced for all speeds.

5.2.2 Low speed balancing procedures: two-plane balancing (B).

If the initial unbalance is principally concentrated in two transverse planes and the corrections are made in these planes, then the rotor is balanced for all speeds.

If the unbalance in the rotor is distributed within a substantially rigid section of the rotor and the unbalance correction is also made within this section, then the rotor is balanced for all speeds.

5.2.3 Individual component balancing prior to assembly (C).

Each component, including the shaft, shall be low-speed balanced before assembly in accordance with ISO 21940-11. In addition, the concentricities of the shaft diameters or other locating features that position the individual components on the shaft shall be held to close tolerances relative to the shaft axis (see ISO 21940-14).

The concentricities of the balancing mandrel diameters or other locating features that position each individual component on the mandrel shall likewise be held within close tolerance relative to

[5] High speed balancing procedures will not be discussed in this document.

COPY COMPLIANT to the original document resident on the computer system at the time of printing

the axis of the mandrel. Errors in unbalance and concentricity of the mandrel can be compensated by index balancing (see ISO 21940-14).

When balancing the components and the shaft individually, make due allowances for any unsymmetrical feature such as keys (see ISO 21940-32) that form part of the complete rotor, but are not used in the individual balancing of the separate components.

It is advisable to check by calculation the unbalance produced by assembly errors, e.g. eccentricities and assembly tolerances to evaluate their effects. When calculating the effect of these errors on the mandrel and on the shaft, it is important to note that the effect of the errors can be cumulative on the final assembly. Procedures for dealing with such errors can be found in ISO 21940-14.

5.2.4 Balancing subsequent to controlling initial unbalance (D).

When a rotor is composed of separate components that are balanced individually before assembly (ISO 21940-12 §6.5.3), the state of unbalance might still be unsatisfactory. Subsequent balancing of the assembly at low speed is permissible only if the initial unbalance of the assembly does not exceed specified values.

If reliable data on shaft and bearing flexibility, etc. are available, analysis of response to unbalance using mathematical models is useful to assess the unbalance correction distribution.

Experience has shown that symmetrical rotors that conform to the requirements above, but have an additional central correction plane can be balanced at low speed with higher initial unbalances of the assembly. Experience has shown that between 30 % and 60 % of the initial resultant, unbalance should be corrected in the central plane.

For unsymmetrical rotors that do not conform to the configuration defined above, e.g. as regards symmetry or overhangs, it might be possible to use a similar procedure using different percentages in the correction planes based on experience.

However, in extreme cases, the initial shaft unbalance can be so large that some other method of balancing the rotor is required, e.g. Procedure E.

5.2.5 Balancing in stages during assembly (E).

The shaft shall first be balanced. The rotor shall then be balanced as each component is mounted, correction being made only on the latest component added. This method avoids the necessity for close control of concentricities of the locating diameters or other features that position the individual components on the shaft.

COPY COMPLIANT to the original document resident on the computer system at the time of printing

If this method is adopted, it is important to ensure that the balance of the parts of the rotor already treated is not changed by the addition of successive components.

In some cases, it can be possible to add two single-plane components at a time and perform two-plane balancing on the assembly by using one correction plane in each of the two components. In cases where several components form a rigid section, e.g. a sub-assembly or core section which is normally balanced in two planes only, one such section can be added at a time and corrected by two-plane balancing.

COPY COMPLIANT to the original document resident on the computer system at the time of printing

6 References

- API STANDARD 610 12th EDITION
- ISO21940-11 – Mechanical vibration – Rotor balancing – Par 11: Procedure and tolerances for rotors with rigid behavior
- ISO21940-12 – Mechanical vibration – Rotor balancing – Par 12: Procedure and tolerances for rotors with flexible behavior
- G.05.03.02 – Balancing of Impellers and Rotors

COPY COMPLIANT to the original document resident on the computer system at the time of printing

7 Attachment A: Guidance for balance quality grades for rotors with rigid behaviour.

Machinery types: general examples	Balance quality Grade G	Magnitude $e_{per}\Omega \left[{}^{mm}/_{s}\right]$
Crankshaft drives for large, slow marine diesel engines (piston speed below 9 m/s), inherently unbalanced	*G4000*	*4000*
Crankshaft drives for large, slow marine diesel engines (piston speed below 9 m/s), inherently balanced	*G1600*	*1600*
Crankshaft drives, inherently unbalanced, elastically mounted	*G630*	*630*
Crankshaft drives, inherently unbalanced, rigidly mounted	*G250*	*250*
Complete reciprocating engines for cars, trucks and locomotives	*G100*	*100*
Cars: wheels, wheel rims, wheel sets, drive shafts Crankshaft drives, inherently balanced, elastically mounted	*G40*	*40*
Agricultural machinery Crankshaft drives, inherently balanced, rigidly mounted Crushing machines Drive shafts (cardan shafts, propeller shafts)	*G16*	*16*
Aircraft gas turbines Centrifuges (separators, decanters) Electric motors and generators (of at least 80 mm shaft height), of maximum rated speeds up to 950 r/min Electric motors of shaft heights smaller than 80 mm Fans Gears Machinery, general Machine tools Paper machines Process plant machines Pumps Turbo chargers Water turbines	*G6.3*	*6.3*
Compressors Computer drives Electric motors and generators (of at least 80 mm shaft height), of maximum rated speeds above 950 r/min Gas turbines and steam turbines Machine-tool drives Textile machines	*G2.5*	*2.5*
Audio and video drives Grinding machine drives	*G1.0*	*1.0*
Gyroscopes Spindles and drives of high-precision systems	*G0.4*	*0.4*

COPY COMPLIANT to the original document resident on the computer system at the time of printing